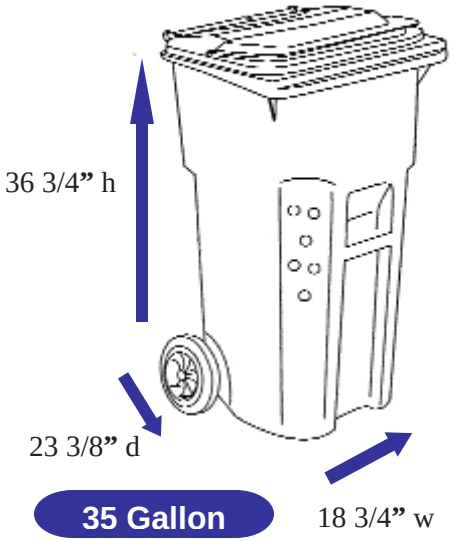
36 3/4” h
23 3/8” d
18 3/4” w
35 Gallon

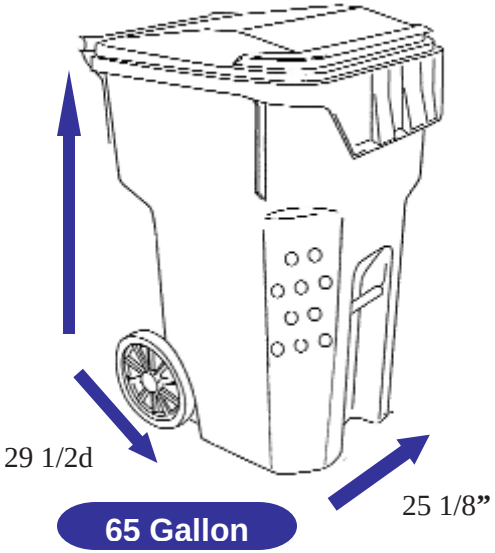
42 3/8” h
29 1/2d
25 1/8”
65 Gallon